적 용 규 격
SPECIFICATION APPLIED

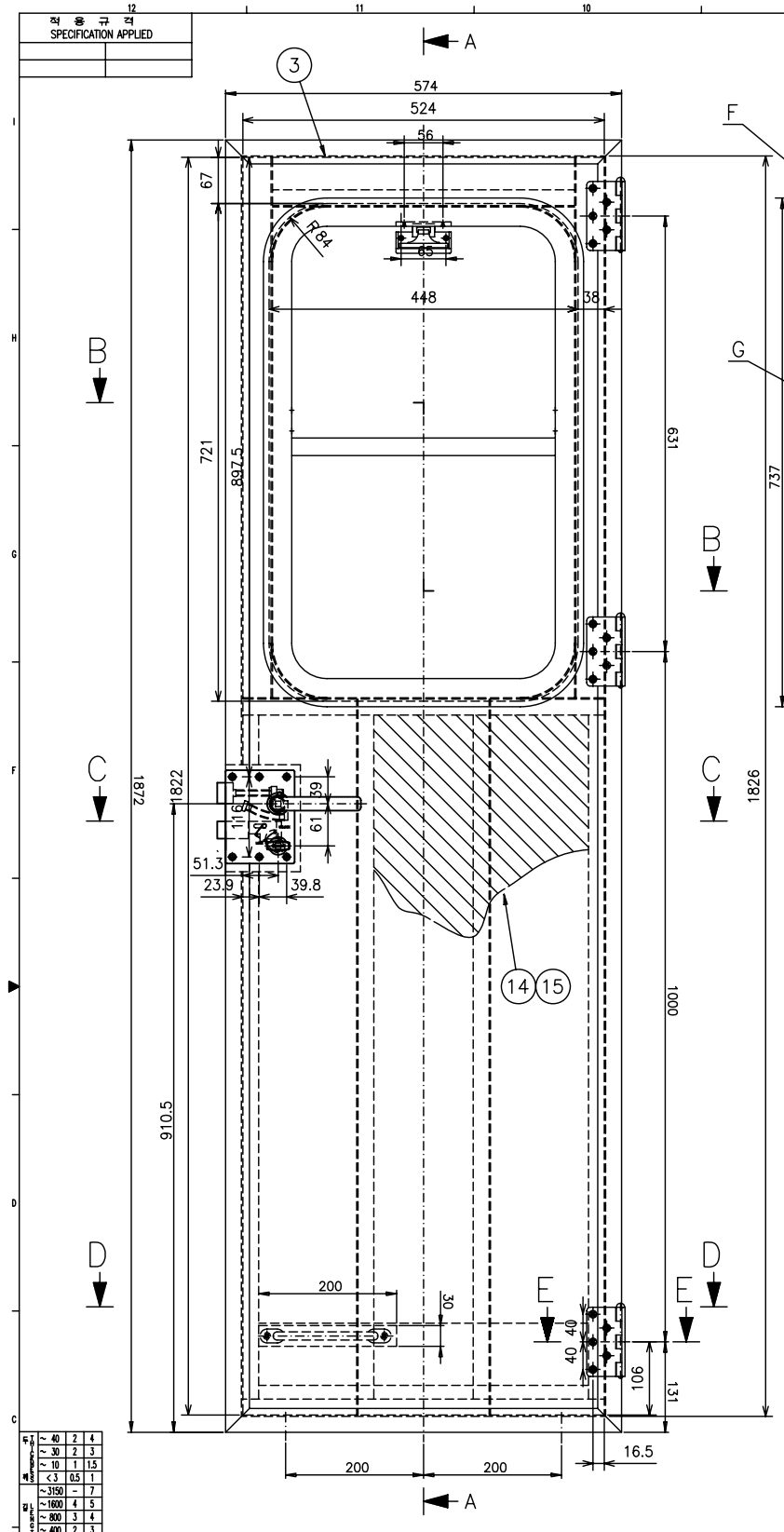

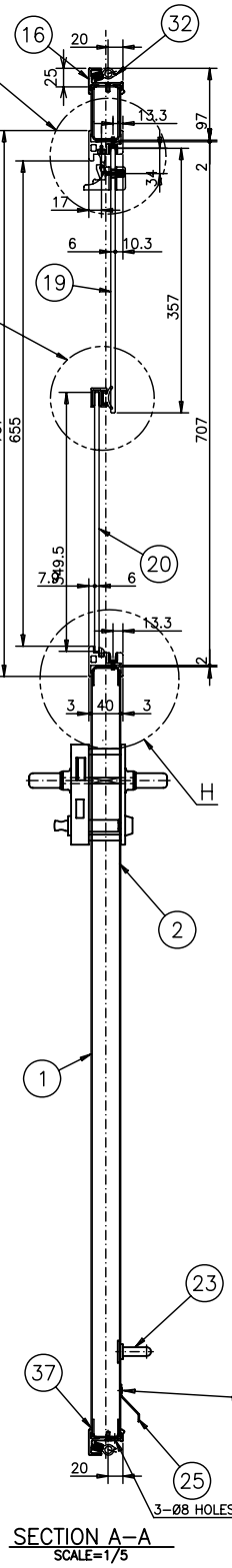

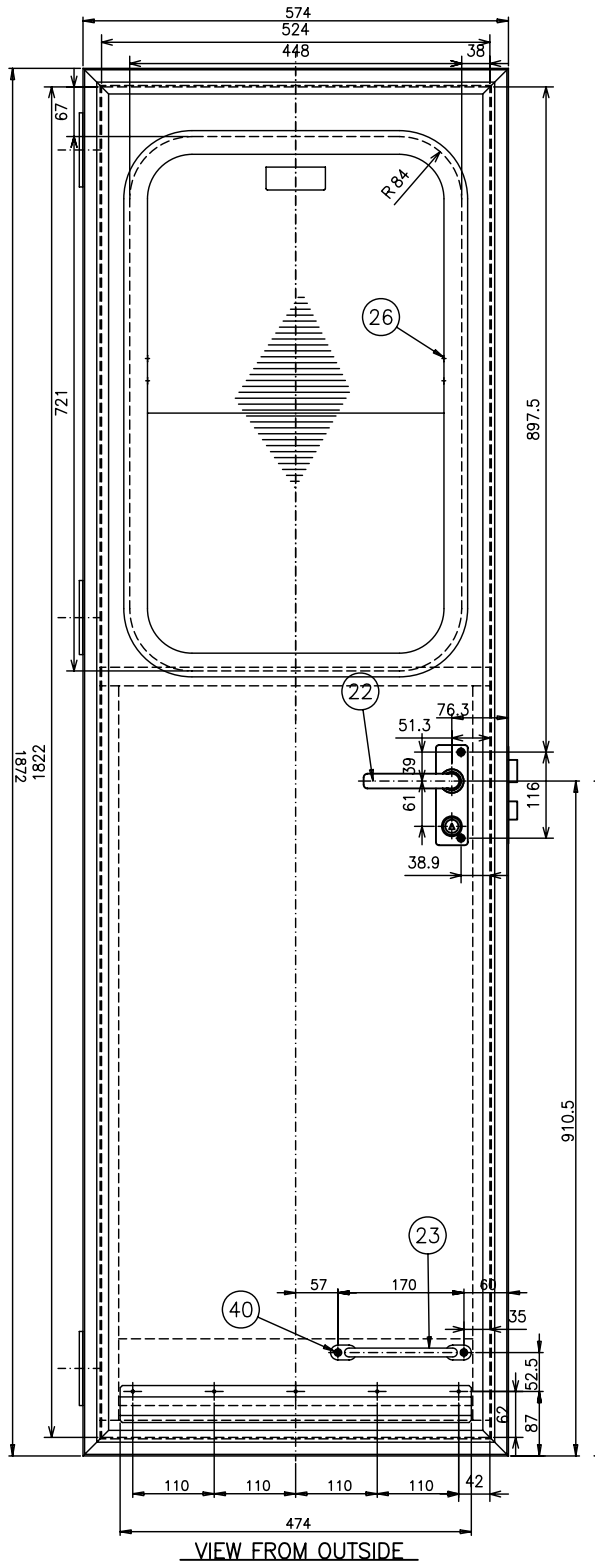

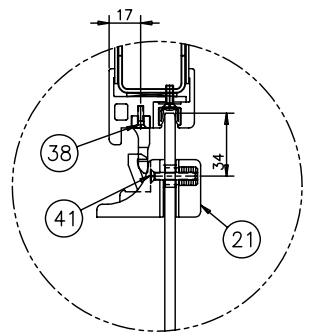

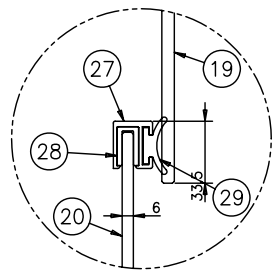

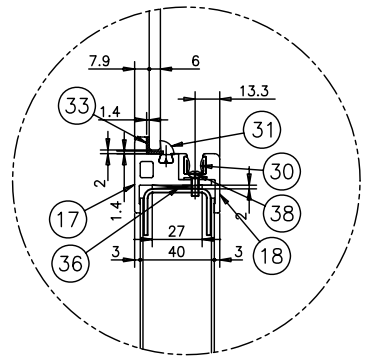

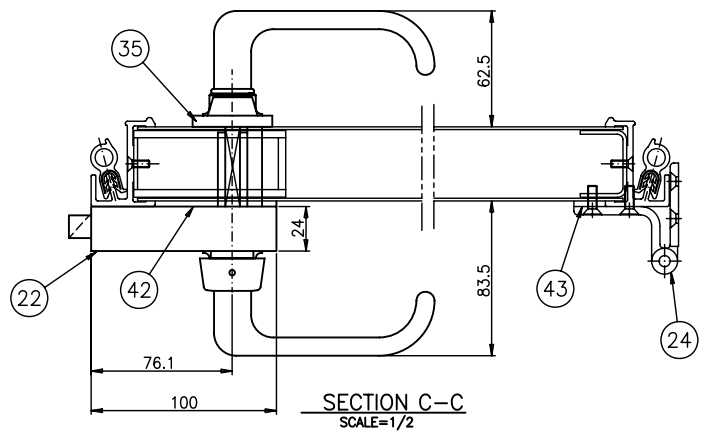

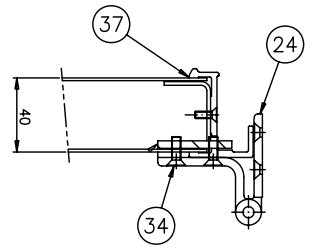

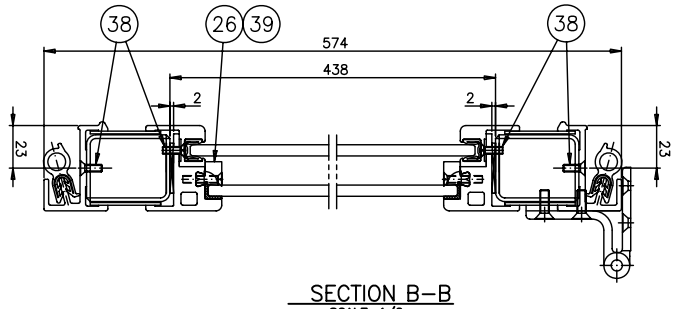

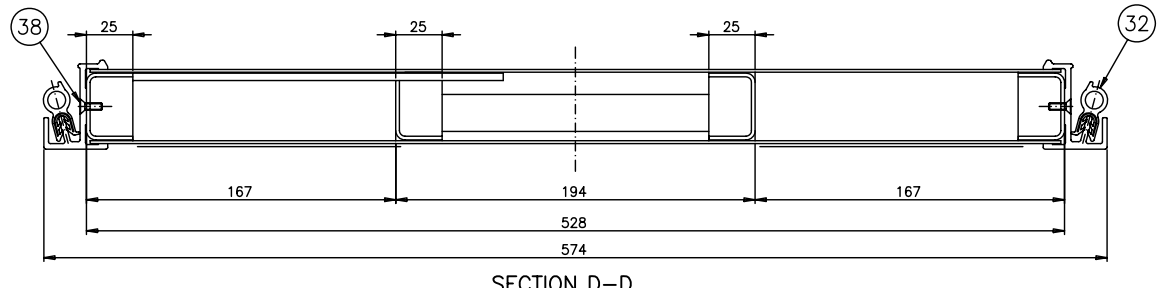

43	RFD60002AN0-043	LINER	SUS304	3		T3x17x100
42	RFD60002AN0-042	LINER	SUS304	1		T3x65x136
41	RFD60002AN0-041	F.H SCREW	SUS304	5		M5x25L
40	RFD60002AN0-040	O.H SCREW	SUS304	2		M5x20L
39	RFD60002AN0-039	F.H SCREW	SUS304	4		M4x20L
38	RFD60002AN0-038	F.H SCREW	SUS304	60		M4x12L
37	RFD60002AN0-037	SEALANT	SILICON	AR		KE-45 GREY
36	RFD60002AN0-036	PACKING	EPDM	1		t2x27L
35	RFD60002AN0-035	O.H SCREW	SUS304	8		M5x40L
34	RFD60002AN0-034	F.H SCREW	SUS304	15		M5x16L
33	RFD60002AN0-033	RUBBER,GLASS CUSION	NEOPRENE	1		L=1124
32	RFD60027AN0	RUBBER,WEATHER STRIP	ASSY	1		L=4900
31	RFD60026AN0	RUBBER,GLASS FIXTURE	ASSY	1		L=1160
30	RFD60025AN0	RUBBER,GLASS SEAL	ASSY	1		L=2162
29	RFD60024AN0	RUBBER,PROTECT AGAINST WIND	ASSY	1		L=400
28	RFD60023AN0	RUBBER,WINDOW SEAL	ASSY	1		L=400
27	RFD60022AN0	WINDOW,PROFILE END	ASSY	1		
26	RFD60030AN0	STOPPER	ASSY	2		
25	RFD60021AN0	PLATE DRIP	ASSY	1		
24	RFD60020AN0	HINGE	ASSY	3		
23	RFD60019AN0	HANDLE ASS'Y	ASSY	1		
22	RFD60029AN0	DEVICE,LOCKING,ASSY	ASSY	1		
21	RFD60017AN0	WINDOW, LOCKING	ASSY	1		
20	RFD60016AN0	GLASS,FIXING WINDOW	ASSY	1		
19	RFD60015AN0	GLASS,SLIDING WINDOW	ASSY	1		
18	RFD60014AN0	FRAME, WINDOW SLIDING ASSY	ASSY	1		
17	RFD60013AN0	FRAME, WINDOW BODY	ASSY	1		
16	RFD60012AN0	MOLDING DOOR/FRAME ASS'Y	ASSY	1		
15	RFD60002AN0-015	ADHESIVE LIQUIDE	ASSY	1		
14	RFD60002AN0-014	HONEY COMB	A3003	1		
3	RFD60033AN0	FRAME CAB SIDE DOOR,ASSY	ASSY	1		
2	RFD60032AN0	OUTSIDE PANEL	ASSY	1		
1	RFD60031AN0	INSIDE PANEL	ASSY	1		

품번 NO.	부품 번호 PART NO.	품 명 DESCRIPTION	재 질 MATERIAL	수량 Q'TY	중량 W.T	비 고 REMARKS

승인 APP	H.G.RYU 2008.11.13	재질 MAT'L ASSY	명 칭 TITLE	CAB SIDE DOOR ASS'Y	
검도 CHK	H.S.KIM 2008.11.13	중중량 G.W			
설계 DGN	J.I.LEE 2008.11.11	일반공차 MC B / WD B / CT B	도면 번호 DRG. NO	RFD60002AN0 MS	Ver. 00 / Rev. --
제도 DRG	S.M.PARK 2008.11.11	SCALE 1/5	매수 SHEET	1 of 1	
		SIZE A1			

HYUNDAI Rotem | TÜVASAŞ DMU

3D5101 | FD- | 넌-PRJT | 정리번호 | CATIA

참고번호 REF. NO. FDP01902

기호 MARK	일 자 DATE	변 경 내 역 DETAIL OF REVISION(E.C ZONE)	설변번호 E.C NO.	설계 DGN	검도 CHK	승인 APP

본 도면은 당사 재산으로서 허가없이 무단복사/배포 금지함. PROPERTY OF ISSUING ENTITY. CANNOT BE DISTRIBUTED OR REPRODUCED WITHOUT AUTHORIZATION.

일반공차 GENERAL TOLERANCE			
등급 GRADE	A	B	C
주조 CASTING			(±)
~20M	8	14	24
~15M	7	12	21
~12M	6	10	18
~8M	5	8	14
~4M	4	6	11
~2M	3	4	8
~1M	2	3	6
~315	1	2	4
~120	1	2	3
~30	1	1	1
등급 GRADE	A	B	C
용접 WELDING			(±)
~20M	–	6.0	8.0
~15M	–	5.0	7.0
~12M	–	4.0	6.0
~8M	–	3.0	5.0
~4M	0.8	2.0	4.0
~2M	0.5	1.2	3.0
~1M	0.3	0.8	2.0
~315	0.2	0.5	1.2
~120	0.15	0.3	0.8
~30	0.1	0.2	0.5
3~6	0.05	0.1	0.2
등급 GRADE	A	B	C
기계 가공 MACHINING			(±)
~400	2	4	
~30	2	3	
~10	1	1.5	
<3	0.5	1	
~3150	–	7	
~1600	4	5	
~800	3	4	
~400	2	3	
~200	1.5	2	
~100	1	1.5	
등급 GRADE	A	B	
주조부위 CASTING			(±)
~40	2	4	
~30	2	3	
~10	1	1.5	
<3	0.5	1	
~3150	–	7	
~1600	4	5	
~800	3	4	
~400	2	3	
~200	1.5	2	
~100	1	1.5	

고객제공은 설변금제로 GENERAL TOLERANCE